| | Technical Specification<br><br>**ACI Data Logger System - User Guide** | Rev. 1.0 |
|---|---|---|
| | FLM-110 GTCUP | 25/01/2023 |

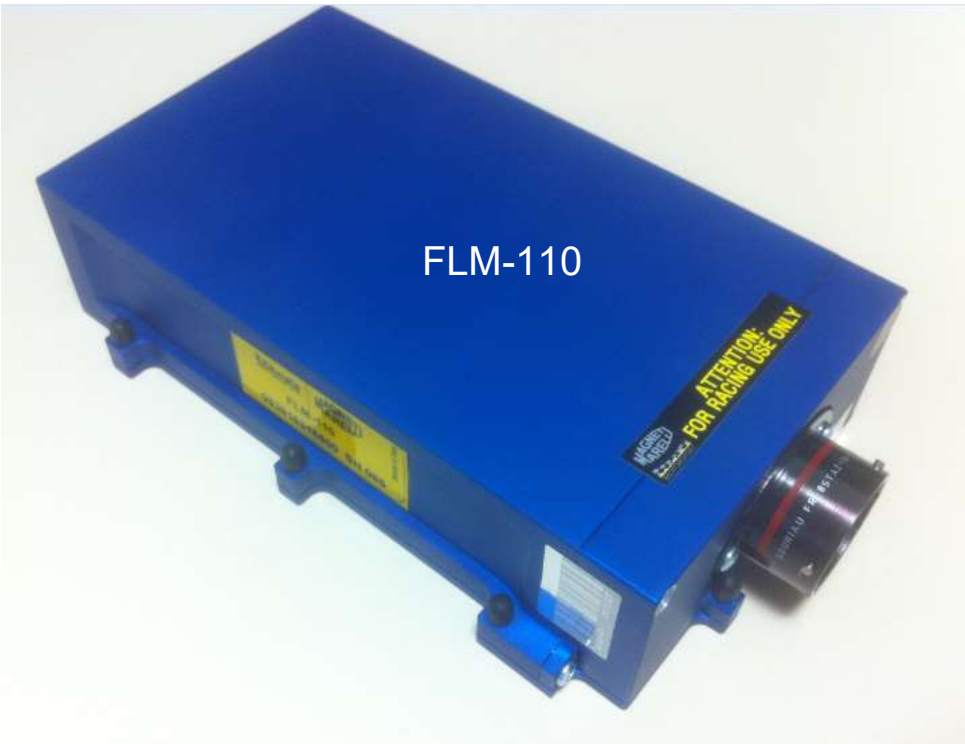




*Marelli Confidential Proprietary*

# Document Revision History

| Release | Date | Author | Comments |
|---|---|---|---|
| 1.0_GTCup | 25/01/2023 | RL | First Release |
| | | | |
| | | | |
| | | | |
| | | | |
| | | | |
| | | | |
| | | | |
| | | | |
| | | | |
| | | | |
| | | | |
| | | | |

# TABLE of CONTENTS


TABLE OF CONTENTS 3

STANDARD ITEMS SUPPLIED IN THE KIT 4

CONTACTS LIST ORDER 5

ARCHITECTURE 6

MAIN LOOM DESIGN 7

CAR LOOM CONNECTION 8

ETHERNET LOOM FIXING 8

CAN1 LINE 9

SYSTEM CONNECTIONS 10

ACI DATA LOGGER 11-12-13

LMM-011 (LEDS MARELLI MODULE) 14

CAR POSITIONING SYSTEM 15-16





*Marelli Confidential Proprietary*

# STANDARD ITEMS SUPPLIED IN THE KIT

STANDARD GTCup KIT: 6 items
083816316600 - MEMORIA DATI * FLM-110
083823321500 - FLM-110 KIT_TRAY
083823343900 - LMM-011_LED_MODULE
083817341500 - CPS-221
083820277500 - GPS UBLOX ACTIVE ANTENNA
083821465800 - 2016 FIAGT3 Wiring Loom - Reworked –

# CONTACTS LIST ORDER

Please send orders and account information to:

| | | |
|---|---|---|
| Orders Mailbox | GTACI@MARELLI.COM | Subject: GT ACI |

For any commercial issue contact:

| | | |
|---|---|---|
| Renata Rolla | renata.rolla@marelli.com | Tel: + 39 02 9722 7478<br>Mobile +39 337 1313733 |
| | | |

Please send technical information/request to:

| | | |
|---|---|---|
| Rosario Libertella | rosario.libertella@marelli.com | Tel: + 39 051 6157365<br>Mobile: + 39 331 6300159 |
| Carlo Tagliaferri | carlo.tagliaferri@marelli.com | Tel. +39 02 97227241<br>Mobile +39 335 7703892 |

# ARCHITECTURE

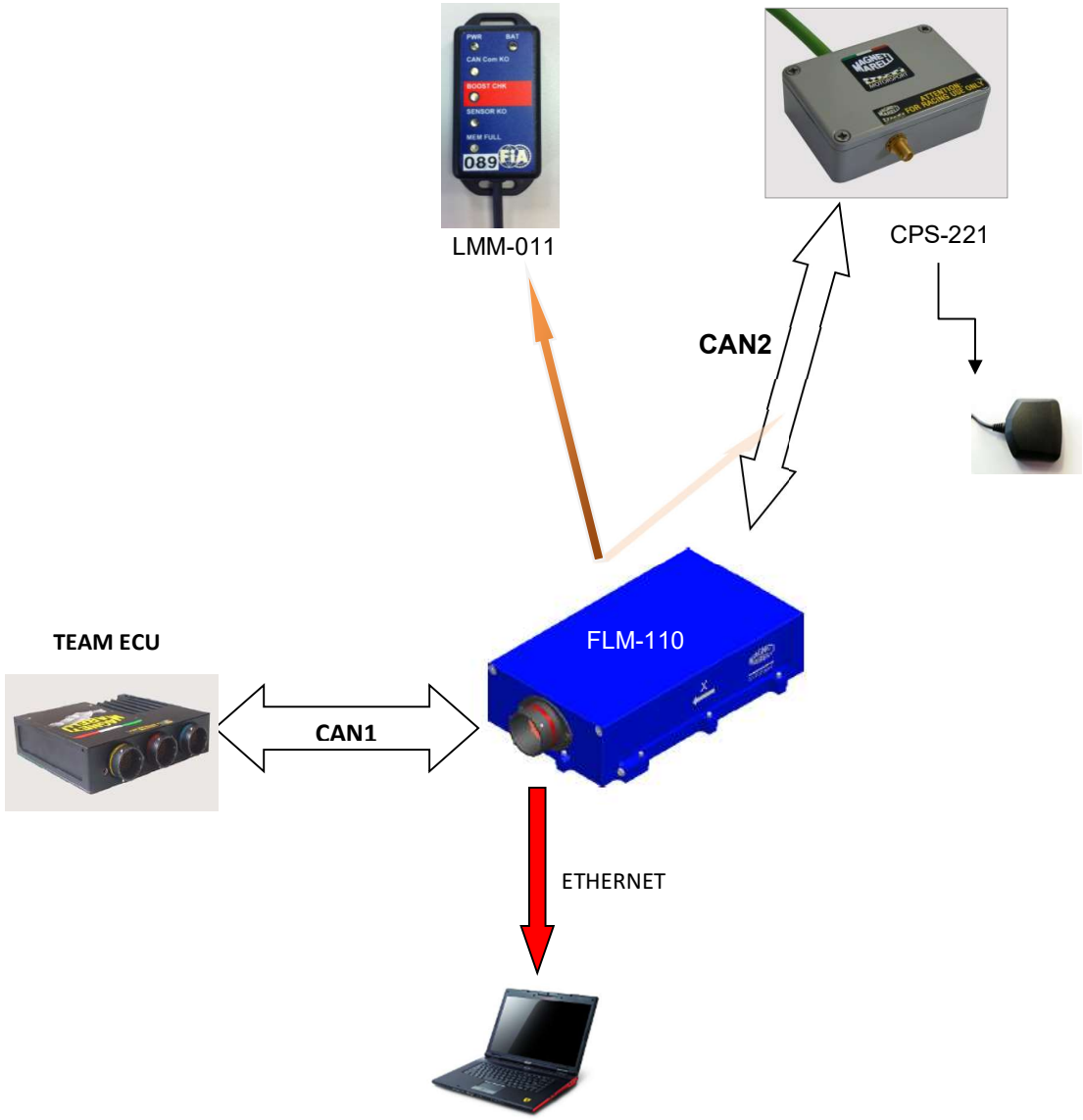





*Marelli Confidential Proprietary*

# MAIN LOOM DESIGN

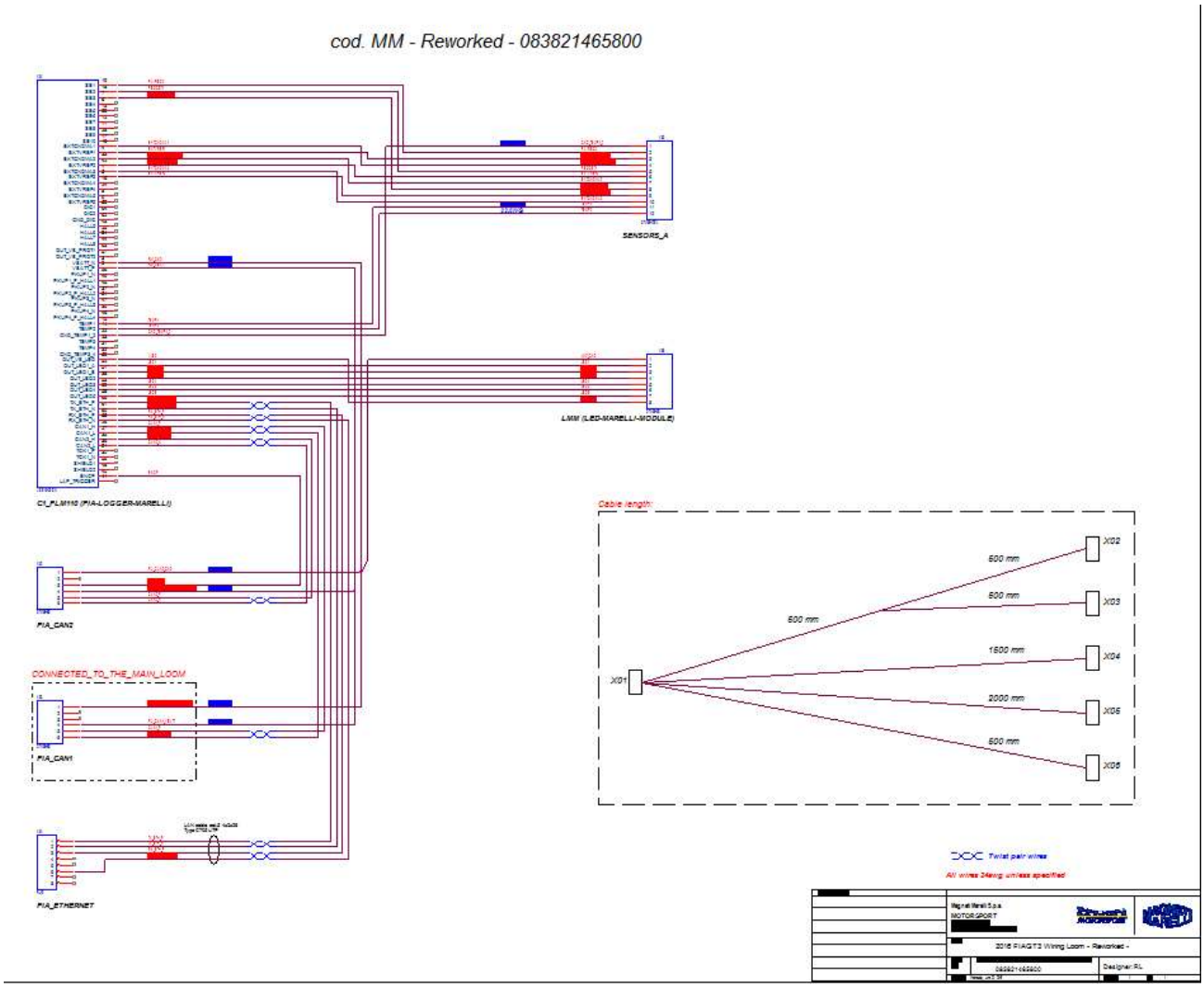





*Marelli Confidential Proprietary*

# CAR LOOM CONNECTION

Power : 12v. 2 Amp. through Car Main-Loom connector
Data from ECU to FLM with CAN1
All connectors plastic DTM except for FLM : type military Souriau

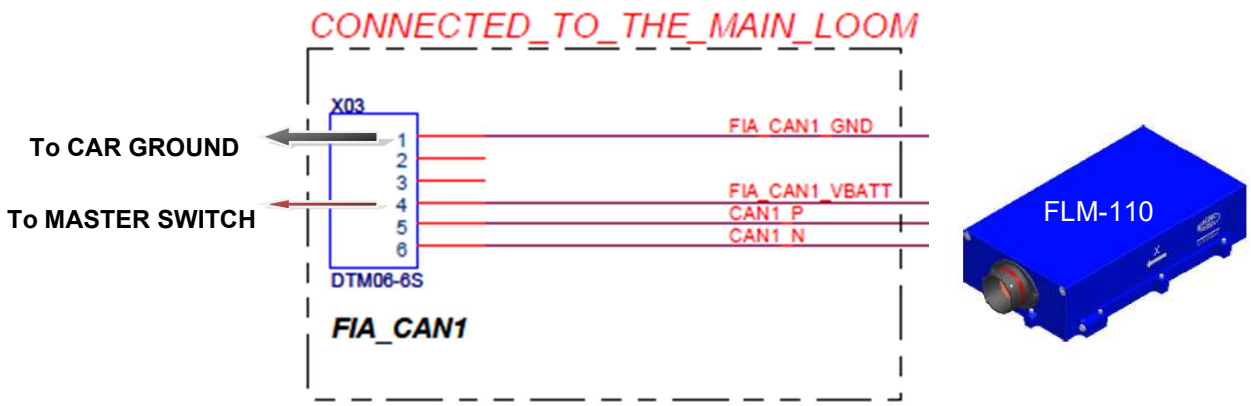


# ETHERNET LOOM FIXING

Ethernet loom must be easily accessible (no strap to cut)

*Marelli Confidential Proprietary*

# CAN1 LINE

**Via CAN BUS the FLM Data logger records the following data from Ecu:**

- Pedal Accelerator
- Throttle
- RPM (Crank)
- Lambda R / L
- PBrake FR/FL/RL/RR or only Front and Rear
- Water Temp
- Airbox Temp
- Gear position
- WheelSpeed FR
- WheelSpeed FL
- WheelSpeed RR
- WheelSpeed RL
- Pboost (only for turbo cars)
- Pairbox
- Steering Angle

**The Team / Manufacturer has to supply the CAN protocol information**



*Marelli Confidential Proprietary*

# SYSTEM CONNECTIONS

## FLM Connector

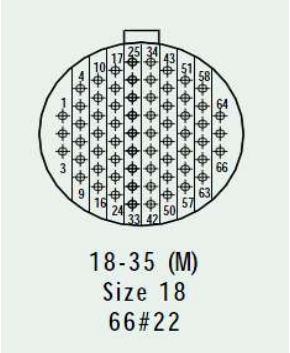


**SOURIAU AS**

**LOOM :** AS618-35SN

**FLM:** AS018-35SPN

## CAN2 Connector

**DEUTSCH DTM 6 way**

**CAN2 → CPS-221**

LOOM: DTM06-6S

CPS-221: DTM04-6P




*Marelli Confidential Proprietary*

## LMM-011 Connector

**DEUTSCH DTM 8 way**

LOOM : DTM06-8S

LMM : DTM04-8P

All connectors on FLM loom must be easily accessible

# ACI Data Logger

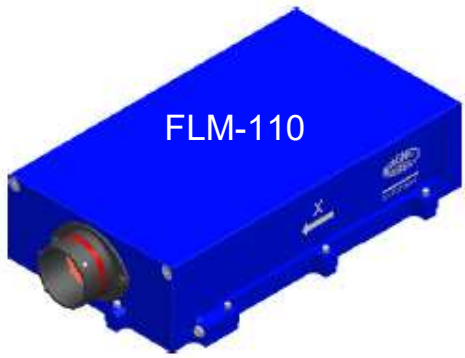


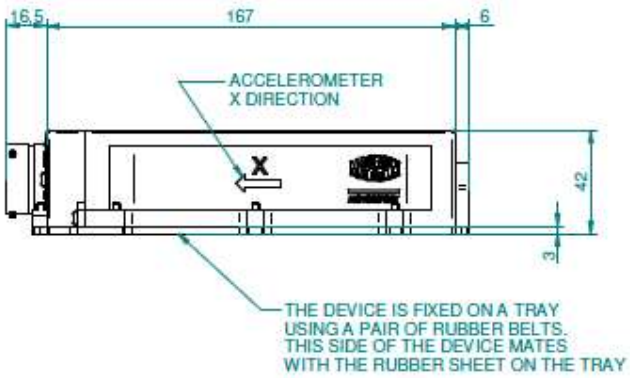


**FLM must be installed with arrows X ➔ in direction of car displacement

REAR CAR FRONT

*Marelli Confidential Proprietary*

BRACKETS

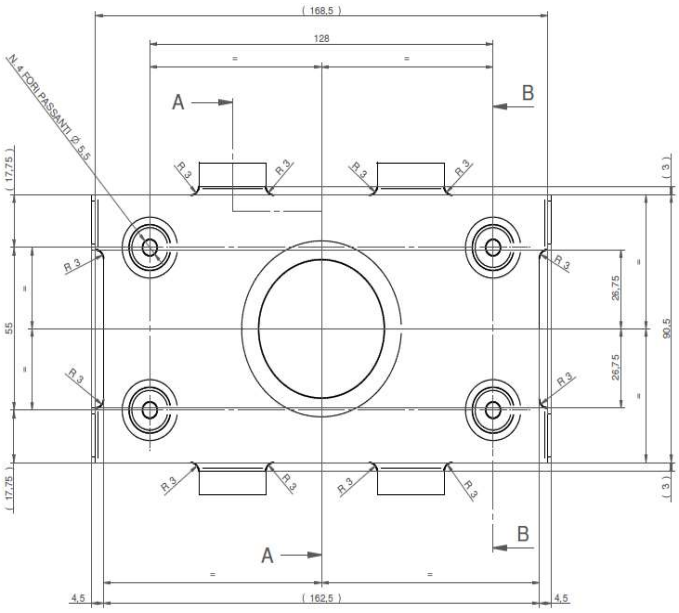





*Marelli Confidential Proprietary*

# LMM (Leds Marelli Module)

This module contains only 6 Leds

1. System PWR
2. Flm internal BAT
3. CAN Com KO
4. BOOST CHK
5. Sensor KO
6. Memory FULL

- IP64
- Fixation with Velcro or tyrap.

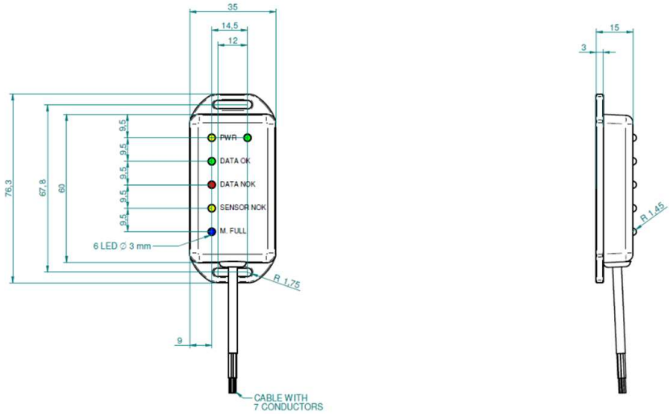


This module must be fixed on FLM with velcro




*Marelli Confidential Proprietary*

# CAR POSITIONING SYSTEM

## 1. GPS module – CPS 221

The GPS module transmits to FLM all the information available on the NMEA standard thought CAN line (e.g. position coordinates, speed etc..) with a frequency of 10 Hz.
This module is used for Lap-Marker and Car position.

- Fixation with Velcro or tyrap.

| Pin Out CPS-220 (Cable) | | |
|---|---|---|
| | Function | wire |
| | | |
| **Inputs** | | |
| Single ended 12bit | 2 | 2 |
| **Outputs** | | |
| Digital output | 2 | 2 |
| **Communication** | | |
| CAN line | 1 | 2 |
| **Miscellaneous** | | |
| VBATT | 1 | 2 |
| ENCP | 1 | 1 |
| Analog ground | 1 | 1 |
| | **Total** | **10** |

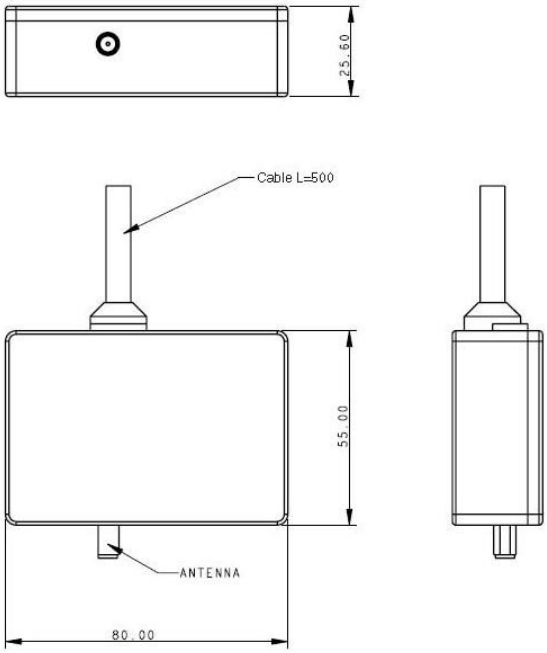





*Marelli Confidential Proprietary*

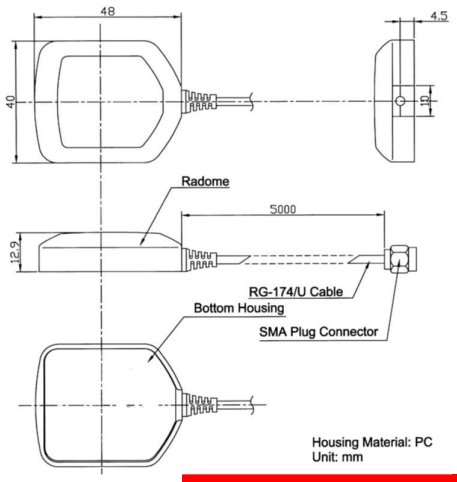


This module must be accessible and fixed with velcro




*Marelli Confidential Proprietary*

**CAN Messages specification**
**for**
**ACI GTCUP Datalogger**
**V2.0**

CAN 1

Baudrate : 1Mbits

## Receiving from ECU

Message ID : 0x168
Frequency : 50 Hz
Format : Motorola
Length : 8 bytes

| CAN ID | Word1 | Word2 | Word3 | Word4 |
|---|---|---|---|---|
| 168 | Acc. Pedal | Throttle | RPM(crank) | Lambda |

Pedal : % (0 – 100) / 1 decimal**. (means the integer send in CAN message is 1/10 of %)**
Throttle : % (0 - 100) / 1 decimal**.**
RPM : rev/min / 0 decimal
Lambda : 2 decimal

Message ID : 0x170
Frequency : 50 Hz
Format : Motorola
Length : 8 bytes

| CAN ID | Word1 | Word2 | Word3 | Word4 |
|---|---|---|---|---|
| 170 | PBrake_FR | PBrake_FL | PBrake_RL | PBrake_RR |

PBrake_FR : bar / 1 decimal / signed
PBrake_FL : bar / 1 decimal / signed
PBrake_RL : bar / 1 decimal / signed
PBrake_RR : bar / 1 decimal / signed

If only 2 Pbrake (Front and Rear) :

PBrake_FR and PBrake_FL = PBrake_Front
PBrake_RL and PBrake_RR = PBrake_Rear

Message ID : 0x172
Frequency : 10 Hz
Format : Motorola
Length : 8 bytes

| CAN ID | Word1 | Word2 | Word3 | Word4 |
|---|---|---|---|---|
| 172 | WaterT | | Airbox Temp /Gear | Car type |

Water Temp : °C / 0 dec / 1 byte (High)
Airbox temp : °C / 0 dec / 1 Byte(High)
Gear : [0 – 6] / 1 byte (Low)
CarType : TBD

Message ID : 0x174
Frequency : 50 Hz
Format : Motorola
Length : 8 bytes

| CAN ID | Word1 | Word2 | Word3 | Word4 |
|---|---|---|---|---|
| 174 | Whspeed FR | Whspeed FL | Whspeed RL | Whspeed RR |

Whspeed FR : Kph / 1 dec
Whspeed FL : Kph / 1 dec
Whspeed RR : Kph / 1 dec
Whspeed RL : Kph / 1 dec

Message ID : 0x176
Frequency : 50 Hz
Format : Motorola
Length : 8 bytes

| CAN ID | Word1 | Word2 | Word3 | Word4 |
|---|---|---|---|---|
| 176 | | Steering angle | Boost Press | |

Steering angle : -100%  to 100% / 1 dec
Boost Pressure : mbar / 0 dec